Typical Characteristics

- Wide input range (4:1), Output: 20W
- Conversion efficiency: 88%(Typ.)
- Isolation voltage: 1500Vdc
- Ultra-low standby power consumption: 0.05W(Typ.)
- Ultra-fast startup: 5ms (Typ.)
- Working temperature: -40℃~+85℃
- Protection: input undervoltage, output short-circuit, overcurrent, overvoltage
- Metal housing, low output ripple
- Industrial standard pin out, through-hole mounting on PCBs

20W, ultra-wide input voltage range, isolated regulated single- or dual-output, DIP package, DC-DC power module



RoHS

URB_LMD-20WR3 and URA_LMD-20WR3 series feature an output power of 20W, a 4:1 wide input voltage range, and efficiency up to 88%. a standard isolation voltage of 1500 VDC, an operating temperature range of -40° C to +85° C, and features input under-voltage protection as well as output over-voltage, over-current, and short-circuit protection. The bare unit complies with CISPR 32/EN 55032 Class A and is widely used in medical, industrial control, power, instrumentation, communications, and railway applications.

Model Number Description

UR x xx xx LMD - 20W R3

- R3: Suffix (3rd-generation product)
- 20W: Rated output power (20W)
- LMD: Package type (50.8 x 25.4 mm)
- xx: Output voltage (rated)
- xx: Input voltage (rated)
- x: No. of output channels (B: single, A: dual, 1500 Vdc isolation)
- UR: Product series (UR indicates 4:1 input, VR indicates 2:1 input)

Product selection table

Certific	Model number	Input voltage range (Vdc)		Output Voltage/Current		Ripple and Noise	Maximum capacitive load②	Efficiency@ Full load
		Rated (range)	Max③	Output V (Vdc)	Output I (mA) (Max. Min.)	Full load (mVp-p) (Typ. /Max.)	μF Max.	% (Min. /Typ.)
	URB2403LMD-20WR3	24 (9-36)	40	3.3	5000/0	50/100	10000	84/86
	URB2405LMD-20WR3			5	4000/0	50/100	10000	86/88
	URB2409LMD-20WR3			9	2222/0	50/100	4700	86/88
	URB2412LMD-20WR3			12	1667/0	50/100	1600	87/89
	URB2415LMD-20WR3			15	1333/0	50/100	1000	88/90
	URB2424LMD-20WR3			24	834/0	50/100	500	86/88

	URA2405LMD-20WR3			±5	±2000/0	50/100	4800	84/86
	URA2409LMD-20WR3			±9	±1111/0	50/100	1000	86/88
	URA2412LMD-20WR3			±12	±834/0	50/100	800	86/88
	URA2415LMD-20WR3			±15	±667/0	50/100	625	86/88
	URA2424LMD-20WR3			±24	±416/0	50/100	300	86/88
	URB4803LMD-20WR3	48 (18-75)	80	3.3	5000/0	50/100	10000	84/86
	URB4805LMD-20WR3			5	4000/0	50/100	10000	84/86
	URB4809LMD-20WR3			9	2222/0	50/100	4700	87/89
	URB4812LMD-20WR3			12	1667/0	50/100	1600	85/87
	URB4815LMD-20WR3			15	1333/0	50/100	1000	88/90
	URB4824LMD-20WR3			24	834/0	50/100	500	86/88
	URA4805LMD-20WR3	48 (18-75)	80	±5	±2000/0	50/100	4800	84/86
	URA4809LMD-20WR3			±9	±1111/0	50/100	2000	84/86
	URA4812LMD-20WR3			±12	±834/0	50/100	800	86/88
	URA4815LMD-20WR3			±15	±667/0	50/100	625	87/89
	URA4824LMD-20WR3			±24	±417/0	50/100	300	86/88
	URB1D03LMD-20WR3	110 (40-160)	180	3.3	5000/0	50/100	10000	80/82
	URB1D05LMD-20WR3			5	4000/0	50/100	10000	83/85
	URB1D09LMD-20WR3			9	2222/0	50/100	1600	84/86
	URB1D12LMD-20WR3			12	1667/0	50/100	2200	84/86
	URB1D15LMD-20WR3			15	1333/0	50/100	1000	84/86
	URB1D24LMD-20WR3			24	833/0	50/100	470	85/87
	URA1D05LMD-20WR3			±5	±2000/0	50/100	4000	82/84
	URA1D09LMD-20WR3			±9	±1111/0	50/100	2000	84/86
	URA1D12LMD-20WR3			±12	±834/0	50/100	1000	86/88
	URA1D15LMD-20WR3			±15	±667/0	50/100	470	86/88
	URA1D24LMD-20WR3			±24	±417/0	50/100	220	86/88

Note: 1. Due to space limitations, the above is only a list of representative products. For products not included in this list, please contact our Sales Department.

2. The maximum capacitive load indicates the maximum capacitive load that can be connected to +Vo or -Vo; if this value is exceeded, the product will not start properly.

3. Exceeding the maximum input voltage may cause permanent damage to the product.

Test Conditions: Unless otherwise specified, all parameter measurements were taken at the rated input voltage, with a purely resistive rated load, and at an ambient temperature of 25℃.

Input characteristics

Items	Working conditions		Min.	Typ.	Max.	Unit
Input Current (Full Load/No Load)	24VDC rated input series, rated input voltage	3.3V	-	799/40	818/50	mA
		5V/9V	-	969/40	993/80	
		12V	-	947/6	969/10	
		15V	-	947/6	969/10	
		24V	-	947/6	969/10	
		±5V/9V	-	968/25	992/35	

		±12V	-	926/6	947/10	
		±15V	-	926/6	937/10	
		±24V	-	936/6	957/10	
	48VDC rated input series, rated input voltage	3.3V	-	400/20	409/25	
		5V/9V	-	485/20	497/60	
		12V	-	474/5	485/9	
		15V	-	474/5	485/9	
		24V	-	474/5	485/9	
		±5V	-	484/5	496/9	
		±12V	-	458/5	469/9	
		±15V	-	458/5	469/9	
		±24V	-	468/5	478/9	
	110VDC rated input series, rated input voltage	3.3V	-	178/10	188/20	mA
		5V/9V	-	214/10	219/20	
		12V	-	212/3	217/8	
		15V	-	212/3	217/8	
		24V	-	212/3	217/8	
		±5V/9V	-	211/3	216/8	
		±12V	-	202/3	206/8	
		±15V	-	200/3	204/8	
		±24V	-	200/3	204/8	
Reflected ripple	Rated input voltage		-	40	-	mA
Impulse voltage （I sec. max）	24VDC rated input series		-0.7	-	50	VDC
	48VDC rated input series		-0.7	-	100	
	110VDC rated input series		-0.7	-	180	
Startup voltage	24VDC rated input series		-	-	9	
	48VDC rated input series		-	-	18	
	110VDC rated input series		-	-	40	
Input undervoltage protection	24VDC rated input series		5.5	6.5	-	
	48VDC rated input series		12	15.5	-	
	110VDC rated input series		26	34	-	
Startup time	Rated input voltage and constant-resistance load		-	10	-	mS
Input filter type			PI type			
Hot swap	-		Not supported			
Remote control （Ctrl）*	Module on		Ctrl floating or connected to a TTL high level（3.5-12VDC）			
	Module off		Connect Ctrl to GND or a low level （0-1.2VDC）			
	Input current during turn-off		-	2	7	mA
Note: *The voltage at the Ctrl pin is relative to the GND of the input pin.						

Output characteristics

Items	Working and test conditions	+Vo1			-Vo2		
		Min.	Typ.	Max.	Min.	Typ.	Max.
Output load	Load percentage	0%	-	100%	0%	-	100%
Output voltage accuracy		-	±1.0%	±2.0%	-	±2.0%	±3.0%
Line Regulation	Input voltage range	-	±0.2%	±0.5%	-	±1.5%	±2%
Load Regulation	20% to 100% rated load, balanced load	-	±0.5%	±1%	-	±4.0%	±5.0%
Ripple & Noise	Pure resistive load, 20 MHz bandwidth, peak-to-peak value	-	50mVp-p	100mVp-p	-	50mVp-p	100mVp-p
Startup delay		-	1ms	-	-	1ms	-
Output voltage adjustment	Input voltage range	0.9* Vo	Vo	1.1* Vo	-	Non-adjustable	-
Dynamic response to a step disturbance	25% of the rated load step	-	±3.0%	±5.0%	-	±3.0%	±5.0%
Dynamic response recovery time		-	300μs	500μs	-	300μs	500μs
Output overvoltage protection	Full voltage range input	110% Vo	-	160%Vo			
Output overcurrent protection	Full voltage range input	110% Io	150% Io	200% Io			
Output short-circuit protection	Full voltage range input	Sustainable, self-recovering					

Note: ① For product models with output voltages of ±5 VDC and ±9 VDC, the maximum output voltage accuracy under 0%-5% load conditions is ±5%;
② When tested under 0%-100% load conditions, the load regulation is ±5%;
③ Load ripple and noise at 0%-5% load is less than or equal to 5% of Vo. The test method for ripple and noise is the twisted-pair test; a capacitive load can be applied to the output to reduce light-load ripple.

General characteristics

Items	Working conditions	Min.	Typ.	Max.	Unit
Insulation voltage	Input-output, test duration: 1 minute, leakage current less than 1 mA.	1500	--	--	VDC

Insulation resistance	Input-output, insulation voltage 500 VDC.	1000	--	--	MΩ
Isolation capacitor	Input-Output, 100 kHz/0.1 V	--	1000	--	pF
Working temperature	Use the reference temperature derating curve	-40	--	+85	℃
Storage temperature		-40	--	+125	
Maximum operating case temperature		-55	--	+100	
Storage humidity	No condensation	5	--	95	%RH
Pin soldering temperature resistance	The solder joint is 1.5 mm from the housing; 10 seconds	--	--	+300	℃
Switching frequency	PWM mode	--	250	--	KHz
Vibration		10-55Hz, 10G, 30 Min. along X, Y and Z			
Housing material		Aluminum alloy housing			
Minimum mean time between failures	MIL-HDBK-217F@25℃	--	$2X10^5$	--	Hrs

Temperature Characteristic Curve

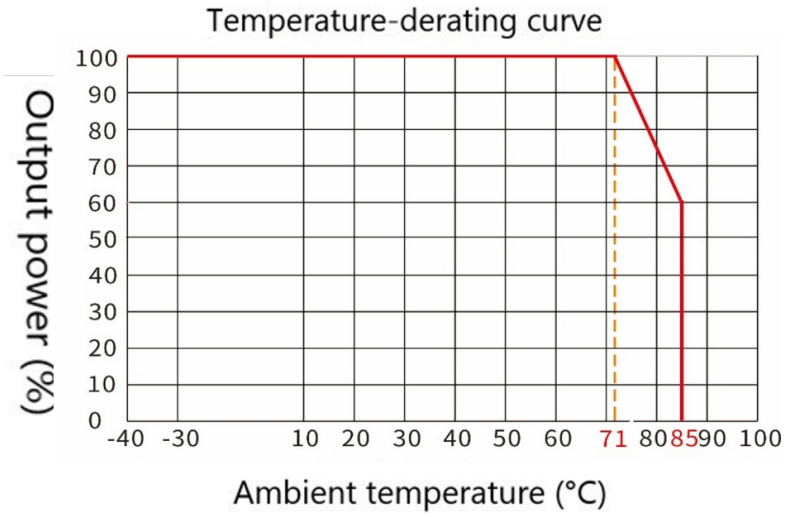

Reference for Design

1、 Recommended Test Circuit

Recommended capacitors: C1: 47－100μF; C2, C3: 10－22μF. All DC/DC converters in this series are tested using the test circuit shown in Figure 1 before shipment.

If further reduction of input and output ripple is required, you can increase the values of the external input and output capacitors C1, C2, and C3, or select capacitors with low equivalent series impedance; however, the capacitance must not exceed the product’s maximum capacitive load.

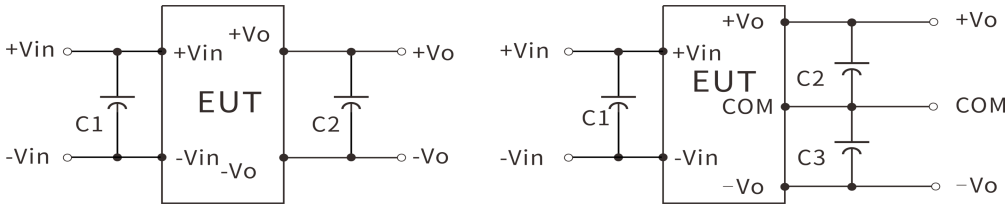

Figure 1

2、EMC Solutions—Recommended Circuits

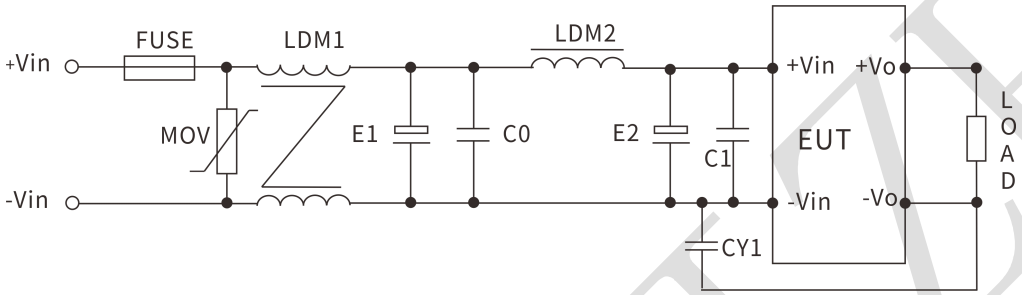

Recommended parameters:

Component code	24V Input	48V Input	110V Input
FMSE fuse	Connect the appropriate fuse based on customer requirements		
MOV varistor	14D560K	14D101K	14D201K
LDM1 common-mode inductor	10 mH	15 mH	30 mH
E1、E2 electrolytic capacitor	100μF/50V	100μF/100V	63μF/200V
C0、D1 ceramic capacitor	1μF/50V	1μF/100V	0.47μF/250V
LDM2 common-mode inductor	10 μH	15 μH	68 μH
CY1 safety Y2 capacitors	1nF/250Vac		

3、Recommended Peripheral Circuit for Output Filtering

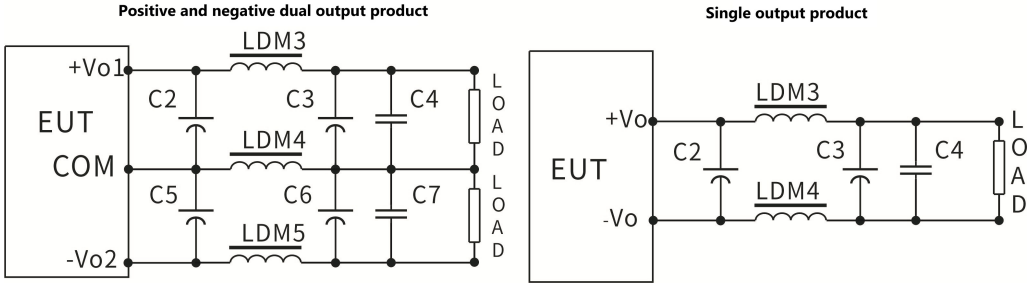

For general ripple and noise requirements, it is recommended to use only C2 and C5 in the peripheral circuit; for strict ripple and noise requirements, it is recommended to use the circuit shown in the figure above.

Note: 1. Use high-frequency, low-impedance electrolytic capacitors for C2, C3, C5, and C6. The total capacitance must not exceed the maximum capacitive load specified in the manual; otherwise, the module will fail to start normally.

2. When applying a capacitive load, ensure that the minimum load is at least 3%; otherwise, it will cause abnormal module output.

3. The LDM5 is intended for use only in dual-output products.

Recommended parameters:

Part code	3.3V Output	±5V or 5V Output	±/9V/12V or 9V/12V Output	±15V or 15V Output	±24V or 24V Output
LDM3 inductor	0.47μH	1μH	2.2 μH	2.2 μH	4.7 μH
LDM4 inductor	0.47μH	1μH	2.2 μH	2.2 μH	4.7 μH
LDM5 inductor	-	1μH	2.2 μH	2.2 μH	4.7 μH
C2、C3 electrolytic capacitor	220μF	220μF	100μF	100μF	68μF
C5、C6 electrolytic capacitor	220μF	220μF	100μF	100μF	68μF
C4、C7 ceramic capacitor	1μF/50V				

4、The use of Trim and the calculation of Trim resistors

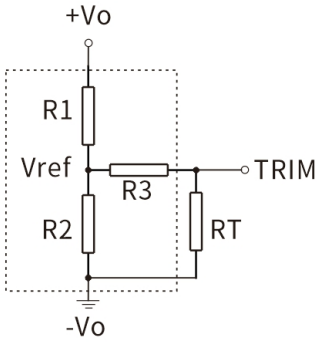

TRIM UP

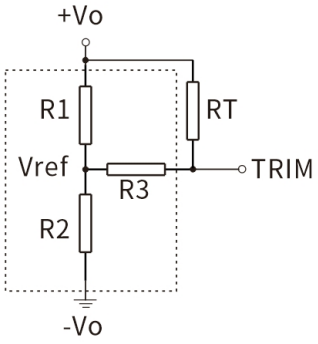

TRIM DOWN

Trim Formula for Calculating Resistance:

UP: $RT=\frac{®*R2}{R2-®}-R3$ $®=\frac{Vref}{Vo-Vref}*R1$

down: $RT=\frac{®*R1}{R1-®}-R3$ $®=\frac{Vo-Vref}{Vref}*R2$

RT stands for TRIM resistor

® is a custom parameter with no practical significance.

Trim's application circuit (the dotted box indicates the interior of the product)

Reference Descriptions:

Vout(V)	R1(KΩ)	R2(KΩ)	R3(KΩ)	Vref(V)
3.3	30	18.261	84.5	1.25
5	45.3	14.778	84.5	1.25
9	30	11.441	120	2.5
12	56	14.571	84.5	2.5
15	56	11.218	154	2.5
24	84.5	9.791	84.5	2.5

5. Ripple & Noise Testing: (Twisted-pair Method, 20 MHz Bandwidth)

Test Method:

1. For ripple and noise testing, use a Category 12 twisted-pair cable. Set the oscilloscope bandwidth to 20 MHz and use a 100 MHz bandwidth probe. Connect a 0.1μF polypropylene capacitor and a 47μF high-frequency, low-impedance electrolytic capacitor in parallel at the probe tip. Set the oscilloscope to "Sample" mode.

2. Schematic diagram for output ripple and noise testing:

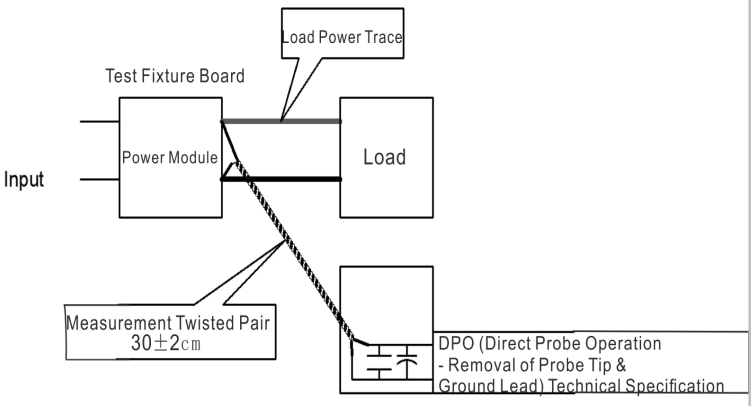

Connect the power supply input to the power source. Connect the power supply output to the electronic load via the fixture board. For testing, use a 30 cm ± 2 cm sampling lead to take a direct sample from the power supply output port. Select insulated wires with appropriate gauge based on the magnitude of the output current.

Package Dimensions and Pin Function Diagram

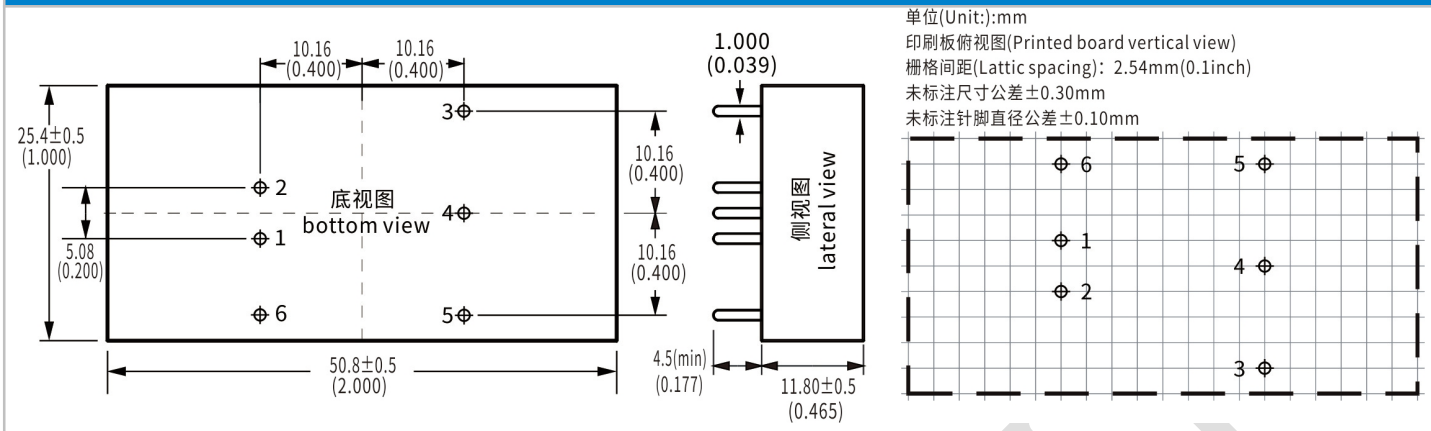

	1	2	3	4	5	6
Single (URB)	-Vin	+Vin	+Vo	Trim	-Vo	CTRL
	Negative input	Positive input	Positive output	Voltage regulating	Output ground	Remote control
Dual (URA)	-Vin	+Vin	+Vo1	COM	-Vo2	CTRL
	Negative input	Positive input	Positive output 1	Common	Negative output 2	Remote control

*Note: If the pin definitions of the power module differ from those in the selection guide, refer to the labels on the actual product.

Package Description

Package code	L x W x H	
LMD	50.8 X25.4X11.8mm	2.000X 1.000 X0.465 inch

Contact

GDHUIZHI®
广东汇智电子技术有限公司
Guangdong Huizhi Electronic Technology Co.,Ltd.
地址：广东省肇庆市端州区 11 区肇庆大道北侧厂房、办公楼(二期)3 楼
Add.: 3rd floor, factory and office building (phase II) on the north side of Zhaoqing Avenue, District 11, Duanzhou District, Zhaoqing City, Guangdong Province, China
Homepage：www.huizhi-elec.com/www.chinaebizal.com
Tel：+86 -758 - 2566585
E-mail：sales@huizhi-elec.com