Typical Characteristics

- Ultra-small SIP-8 package
- Wide input range：4:1
- Working temperature：-40℃ to +85℃
- Isolation voltage: 3000VDC
- Low ripple and noise
- Short-circuit protection (self-recovering)
- Low no-load power consumption: 0.12W
- Input undervoltage protection; output short-circuit and overcurrent protection

3W, ultra-wide voltage input, isolated regulated positive and negative dual/ single output, DC/DC power module



URF_S-3WR3 and URE_S-3WR3 series are isolated 3W DC-DC converters with a 4:1 input-to-output ratio and standard voltage output. These products feature a compact SIP-8 plastic-pin package, high efficiency, an operating temperature range of -40℃ to +85℃, and include remote control and continuous short-circuit protection. Their compact size and cost-effective design make these converters an ideal solution for communications equipment, instrumentation, and industrial electronics applications.

Model Number Description

UR x xx xx S - 3W R3

- R3 — Suffix (3rd-generation product)
- 3W — Rated output power (3W)
- S — Package type (22 x 9.5 x 12 mm)
- xx — Output voltage (rated)
- xx — Input voltage (rated)
- x — No. of output channels (F: single, E: dual, 3000 Vdc isolation)
- UR — Product series (UR indicates 4:1 input, VR indicates 2:1 input)

Product selection table

Certification	Model number	Input voltage range (Vdc)	Output Voltage/Current		Ripple and Noise	Efficiency@ Full load	Maximum capacitive load
		Rated② (range)	Output V (Vdc)	Output I (mA) (Max. Min.)	Full load (mVp-p) (Typ. /Max	% (Min. / Typ.)	μF
	URF2403S-3WR3	24.0 (9.0-36.0)	3.3	900	80/120	70/78	2200
	URF2405S-3WR3		5	600	80/120	74/76	2200
	URF2409S-3WR3		9	333	80/120	76/80	680
	URF2412S-3WR3		12	250	80/120	76/80	680
	URF2415S-3WR3		15	200	80/120	76/80	470
	URF2424S-3WR3		24	125	80/120	76/80	330
	URE2403S-3WR3	24.0	±3.3	±300	80/120	70/78	1000

	URE2405S-3WR3		±5	±300	80/120	74/76	1000
	URE2409S-3WR3		±9	±167	80/120	76/80	1000
	URE2412S-3WR3		±12	±125	80/120	76/80	470
	URE2415S-3WR3		±15	±100	80/120	76/80	220
	URE2424S-3WR3		±24	±63	80/120	76/80	100
	URF4803S-3WR3	48.0 (18-75.0)	3.3	900	80/120	70/78	2200
	URF4805S-3WR3		5	600	80/120	74/76	2200
	URF4809S-3WR3		9	333	80/120	76/80	680
	URF4812S-3WR3		12	250	80/120	76/80	680
	URF4815S-3WR3		15	200	80/120	76/80	470
	URF4824S-3WR3		24	125	80/120	76/80	330
	URE4803S-3WR3	48.0 (18-75.0)	±3.3	±300	80/120	70/78	1000
	URE4805S-3WR3		±5	±300	80/120	74/76	1000
	URE4809S-3WR3		±9	±167	80/120	76/80	1000
	URE4812S-3WR3		±12	±125	80/120	76/80	470
	URE4815S-3WR3		±15	±100	80/120	76/80	220
	URE4824S-3WR3		±24	±63	80/120	76/80	100

Note: 1. Due to space limitations, the above is only a list of representative products. If you require products not included in this list, please contact our Sales Department.

2. The maximum capacitive load indicates the maximum capacitive load that can be connected to +Vo or -Vo; if this value is exceeded, the product will not start properly.

Test Conditions: Unless otherwise specified, all parameter measurements were taken at the nominal input voltage, with a purely resistive rated load, and at an ambient temperature of 25℃.

Input characteristics

Items	Working conditions	Min.	Typ.	Max.	Unit
Input Current (Full Load/No Load)	24V rated input, 3.3VDC output	--	105/5	118/12	mA
	24V rated input, 5VDC output	--	164/5	166/12	
	24V rated input, other output	--	156/5	164/12	
	48V rated input, 3.3VDC output	--	53/3	59/8	
	48V rated input, 5VDC output	--	82/3	83/8	
	48V rated input, other output	--	78/3	82/8	
Reflected ripple current		--	50	--	
Impulse voltage （1 sec. max）	24V rated input	-0.7	--	50	VDC
	48V rated input	-0.7	--	80	
Startup voltage	24V rated input	-	-	9	
	48V 标 rated input	-	-	18	
Input undervoltage protection		-	-	-	

Input filter type		Capacitor filtering
Hot swap	-	Not supported
Remote control (Ctrl)*	Module on	Ctrl floating or high level（ ＞ 0.8V）
	Module off	Ctrl connect a low level（＜ 0.6VDC）

Note: *For a description of the remote control (Ctrl) function, please refer to the “Typical Application Reference Circuits” section of this manual.

Output characteristics

Items	Working and test conditions		Min.	Typ.	Max.	Unit
Output voltage accuracy	5%~100% load, input voltage range	3.3V/5V output	--	±3.0	±5.0	%
		Others	--	±1.0	±3.0	%
Line Regulation	Full load, input voltage from low to high		--	±0.5	±1.0	%
Load Regulation	5%~100% load		--	±0.5	±1.5	%
Transient recovery time	25% load step change		--	±5	±8	mS
Transient Response Bias			--	±3	±5	%
Ripple & Noise	Pure resistive load, 20 MHz bandwidth, peak-to-peak value		--	80	120	mVp-p
Temperature drift coefficient	Full load		--	±0.02	±0.03	%/° C
Output short-circuit protection			Sustainable, self-recovering			

Note: ① Test method for ripple and noise: Twisted-pair test method.

General characteristics

Items	Working conditions	Min.	Typ.	Max.	Unit
Insulation voltage	Input-output, test duration: 1 minute, leakage current less than 1 mA.	3000	--	--	VDC
Insulation resistance	Input-output, insulation voltage 500 VDC.	1000	--	--	MΩ
Isolation capacitor	Input-Output, 100 kHz/0.1 V	--	1000	--	pF
Working temperature	Use the reference temperature derating curve	-40	--	+85	℃
Storage temperature		-40	--	+125	
Maximum operating case temperature		--	25	--	
Storage humidity	No condensation	5	--	95	%RH
Pin soldering temperature resistance	The solder joint is 1.5 mm from the housing; 10 seconds	--	--	+300	℃

Switching frequency	Full load, rated voltage input	--	300	--	KHz
Vibration		10-55Hz, 10G, 30 Min. along X, Y and			
Housing material		Black flame-retardant, heat-resistant plastic (UL94 V-0)			
Minimum mean time between failures	MIL-HDBK-217F@25℃	1000	--	--	KHrs

Temperature Characteristic Curve

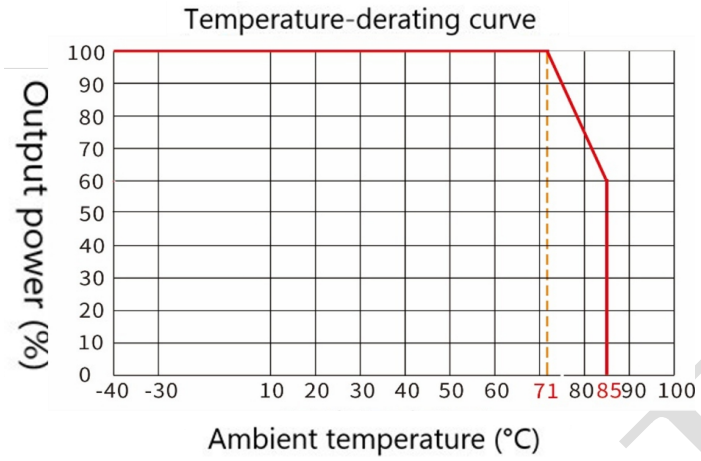

Typical Application Reference Circuit (Recommended Parameters)

1. Typical application circuit:

All DC/DC converters in this series are tested using the test circuit recommended in (Figure 2) before leaving the factory.

If further reduction of input and output ripple is required, the external input and output capacitors (Cin1, Cs, and Cout) can be appropriately increased in value, or capacitors with low equivalent series impedance can be selected. Cs is used to reduce ripple; if the ripple already meets the requirements, there is no need to add Cs. However, appropriate filter capacitor values must be selected; if the capacitance is too large, it is likely to cause startup issues. For each output channel, while ensuring safe and reliable operation, the maximum capacitance of the filter capacitor must be less than the maximum capacitive load.

Single

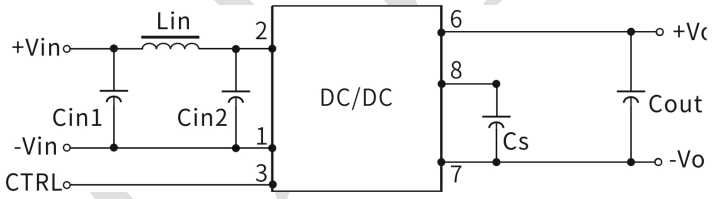

Figure 1

Dual

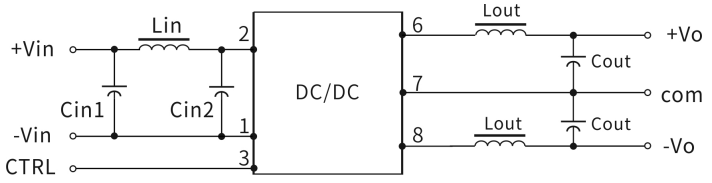

Figure 2

Input Voltage	24VDC	48VDC
Cin1	47uF	22uF
Cin2	22uF	10uF
Lin	4.7uH-12uH	10uH-22uH
Cs	10uF-22uF	10uF-22uF
Cout	100uF(Typ.)	100uF(Typ.)
Lout	2.2uH-10uH	2.2uH-10uH

2. EMC typical application circuit

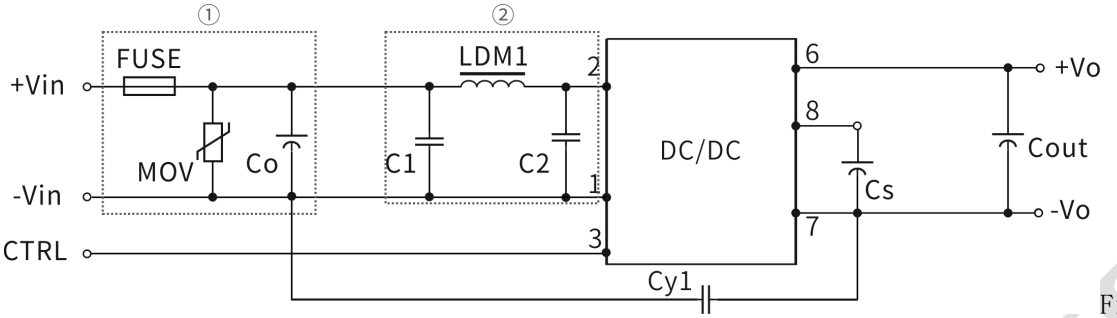

Figure 3

Component code	24V Input	48V Input
FMSE fuse	Slow-blow fuses; select based on the customer's actual input current	
MOV varistor	14D560K	14D101K
LDM1 inductor	12 uH	22uH
Co electrolytic capacitor	220μF/50V	100μF/100V
C1 ceramic capacitor	47μF/50V	22μF/100V
C2 ceramic capacitor	22μF/50V	10μF/100V
Cout ceramic capacitor	Refer to the Cout parameter in Figure 2	Refer to the Cout parameter in Figure 2
CY1 Safety capacitors	1nF/2KV	

Note:

In Figure 3, part ① is used for EMS testing; part ② is used for EMI filtering and can be selected as needed;

5. Output Load Requirements

During operation, the minimum output load of the module must not be less than 5% of the rated load. To meet the performance specifications in this technical manual, please connect a 5% dummy load in parallel at the output. The dummy load is typically a resistor; please note that the resistor must be derated.

Package Dimensions and Pin Function Diagram

1) Appearance Dimensions (Unit: mm, Tol.: xx ±0.25)

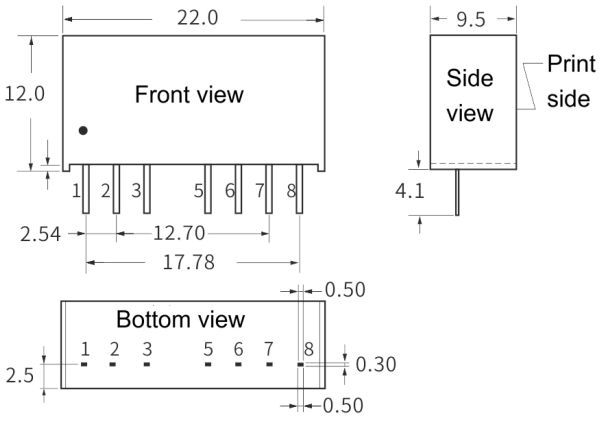

2) Pin Assignment

Pin out	1	2	3	4	5	6	7	8
Single	-Vin	+Vin	CTRL	NP	NC	+Vout	-Vout	CS
	- input	+ input	R. Ctrl	No Pin	No E.	+ output	- output	Add Cap.
+ & - Dual	-Vin	+Vin	CTRL	NP	NC	+Vout	COM	-Vout
	- input	+ input	R. Ctrl	No Pin	No E.	+ output	Com. G	- output

3) Recommended layout

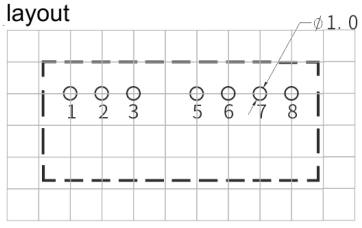

Remarks: grid distance：2.54*2.54mm

*Note: If the pin definitions of the power module differ from those in the selection guide, refer to the labels on the actual product.

Package Description

Package code	L x W x H	
URF/URE	22.0 x 9.5 x 12.0 mm	0.866 ×0.374 ×0.472inch

Test Application Reference

Ripple & Noise Testing: (Twisted-pair Method, 20 MHz Bandwidth)

Test Method:

1. For ripple and noise testing, use a Category 12 twisted-pair cable. Set the oscilloscope bandwidth to 20 MHz and use a 100 MHz bandwidth probe. Connect a 0.1μF polypropylene capacitor and a 4.7μF high-frequency, low-impedance electrolytic capacitor in parallel at the probe tip. Set the oscilloscope to "Sample" mode.

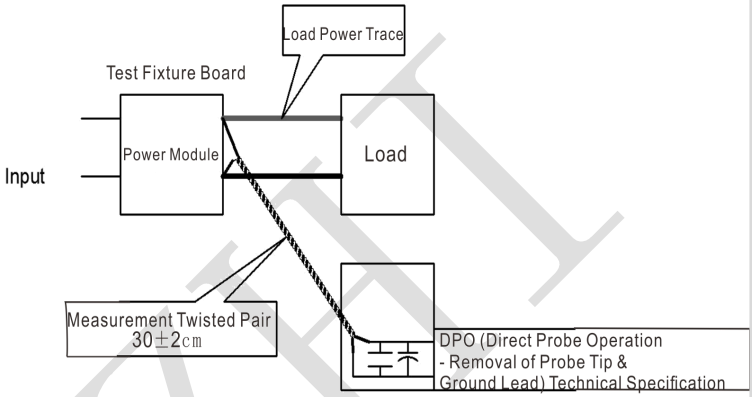

2. Schematic diagram for output ripple and noise testing:
Connect the power supply input to the power source. Connect the power supply output to the electronic load via the fixture board. For testing, use a 30 cm ± 2 cm sampling lead to take a direct sample from the power supply output port. Select insulated wires with appropriate gauge based on the magnitude of the output current.

Application Precautions

1. It is recommended to use this product at a load of 5% or higher. If the load is below 5%, the product's ripple performance may exceed specifications; however, this does not affect the product's reliability.

2. The recommended load imbalance for dual-output modules is ≤±5%. If the imbalance exceeds ±5%, we cannot guarantee that the product's performance will meet all performance specifications listed in this manual. For specific circumstances, please contact our technical staff directly;

3. Maximum capacitive load values are tested within the input voltage range and under full-load conditions;

4. Unless otherwise specified, all specifications in this manual are measured at Ta = 25° C, humidity < 75% RH, nominal input voltage, and rated output load;

5. All test methods for the specifications in this manual are based on our company's corporate standards;

6. We offer product customization; please contact our technical staff directly for specific requirements;

7. Product specifications are subject to change without notice.

Contact

GDHUIZHI®
广东汇智电子技术有限公司
Guangdong Huizhi Electronic Technology Co., Ltd.
地址：广东省肇庆市端州区 11 区肇庆大道北侧厂房、办公楼(二期)3 楼
Add.: 3rd floor, factory and office building (phase II) on the north side of Zhaoqing Avenue, District 11, Duanzhou District, Zhaoqing City, Guangdong Province, China
Homepage：www.huizhi-elec.com/www.chinaebizal.com
Tel：+86 -758 - 2566585
E-mail：sales@huizhi-elec.com

GDHUIZHI